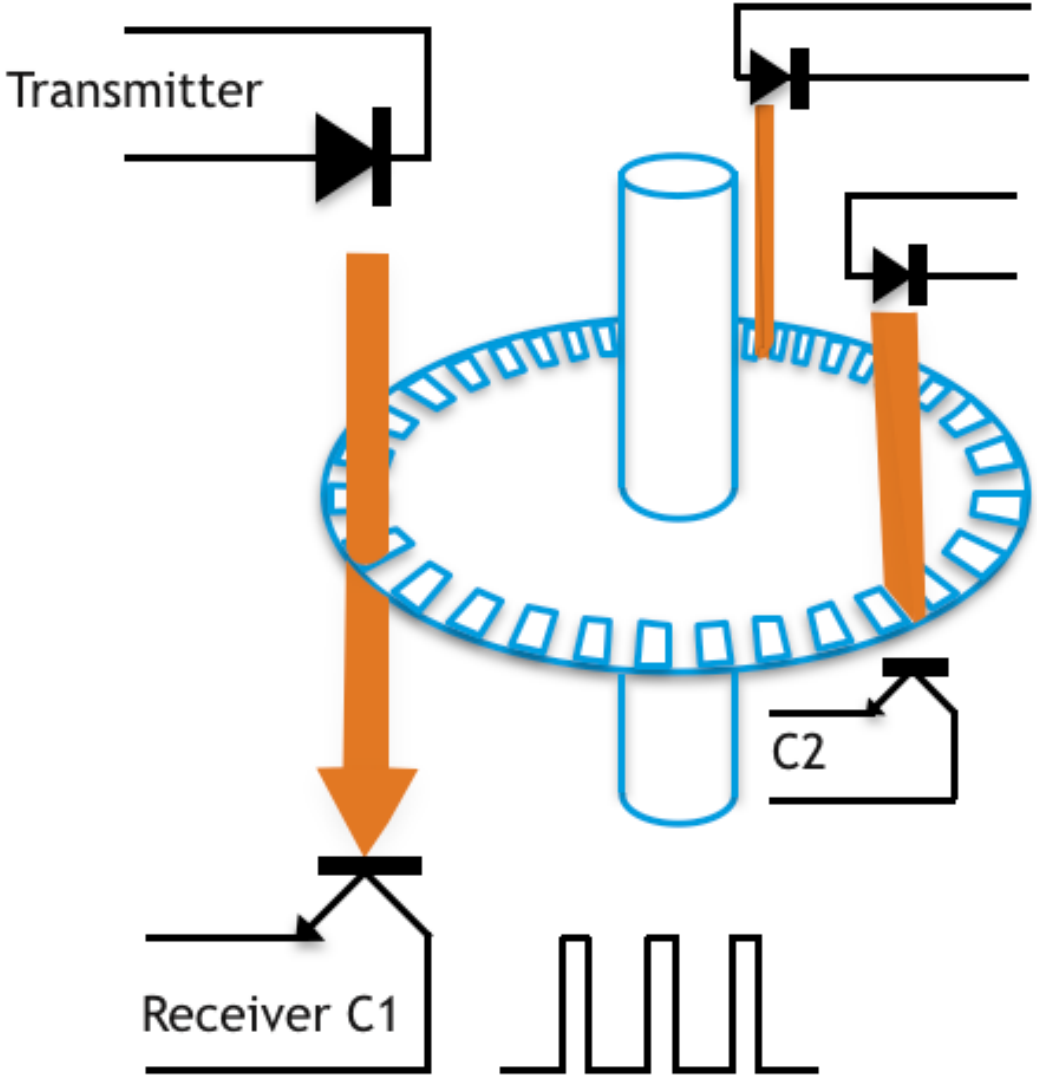
Transmitter
C2
Receiver C1

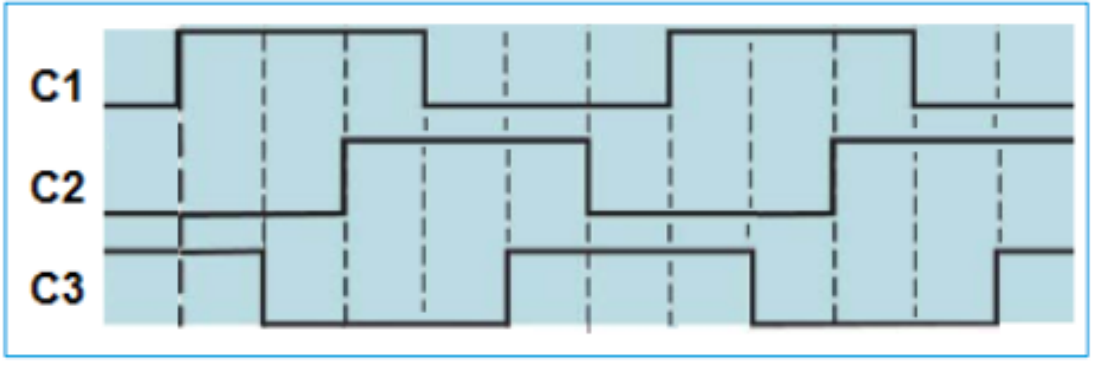
C1
C2
C3